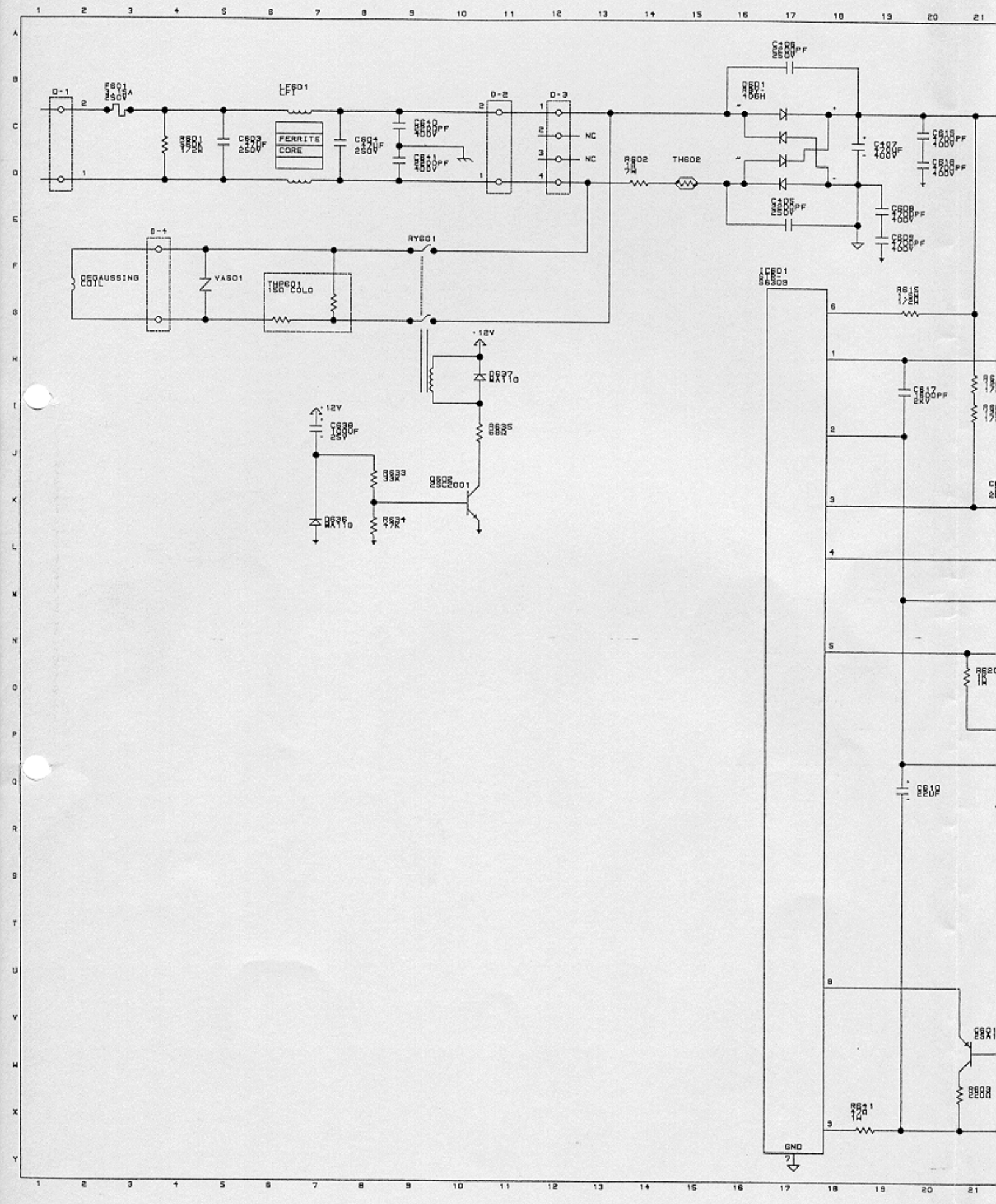
D-1
FS01
LF01
LF1
FERRITE
CORE
R601
172K
C603
2500F
C604
2500F
C610
4000PF
C611
4000PF
D-2
D-3
NC
NC
R602
1Ω
5W
TH602
C608
2500PF
D601
MBD-
406H
C607
4700F
400V
C618
4000PF
C619
4000PF
C606
2500PF
C608
4000PF
C609
4000PF
D-4
DEGAUSSING
COIL
VA601
THP601
150 COLD
RY601
+12V
D637
BX110
R635
68R
+12V
C638
1000F
25V
R633
33R
Q602
2SC2001
D636
BX110
R634
47R
IC601
SIP
SG309
R615
1.2Ω
C617
1800PF
2KV
C610
220F
R621
1Ω
GND

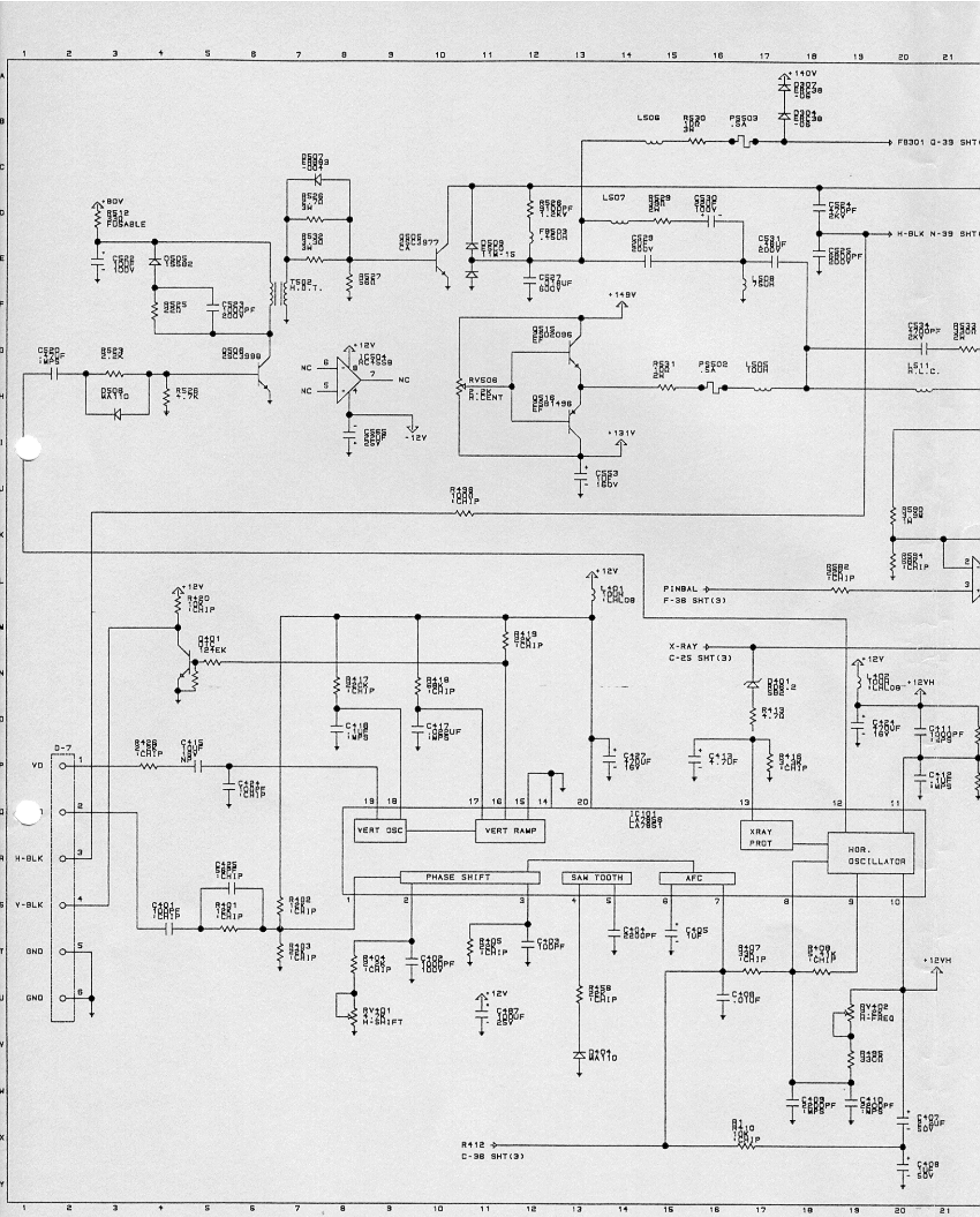
+140V
LS06
R520
3W
FS503
.5A
F8301 Q-39 SHT
LS07
R529
2W
C530
100V
C524
2KV
H-BLK N-39 SHT
C529
100V
C531
200UF
L508
C525
1000PF
+80V
R512
FUSABLE
C528
100V
D505
1N4002
R505
22K
C503
2000PF
T502
H.O.T.
R527
68K
Q505
2SC3977
D509
1N4-15
C527
630UF
+149V
Q515
2SD2096
RV508
2.2K
H:CENT
Q516
2SB1496
R531
2W
FS502
.5A
L505
100A
C534
2000PF
2KV
R533
2W
L511
H.L.C.
C520
.1MFF
R503
2.2K
D508
1N4110
R508
4.7K
+12V
IC501
AC4559
NC
C505
25V
-12V
C503
16V
R488
1CAIP
R500
1W
R504
68K
1CAIP
R502
1CAIP
PINBAL
F-38 SHT(3)
+12V
R420
1CAIP
Q401
124EK
R419
1CAIP
L401
100U
1CHL08
X-RAY
C-25 SHT(3)
D401
2
R413
4.7K
+12V
L406
100U
1CHL08
+12VH
R417
68K
1CAIP
R418
68K
1CAIP
C418
1MPS
C412
1MPS
C427
220UF
16V
C413
4.7UF
R416
1CAIP
C424
220UF
16V
C411
1000PF
C412
1MPS
D-7
VD
H-BLK
V-BLK
GND
GND
R408
1CAIP
C415
10UF
16V
NP
C404
1CAIP
C425
68PF
1CAIP
C401
1CAIP
R401
12K
1CAIP
R402
12K
1CAIP
R403
1CAIP
IC101
LA2858
LA2851
VERT OSC
VERT RAMP
XRAY
PROT
HOR.
OSCILLATOR
PHASE SHIFT
SAW TOOTH
AFC
R404
8.2K
1CAIP
C406
1000PF
RV401
H:SHIFT
R405
1CAIP
C403
100PF
C401
2200PF
C405
10UF
R407
33K
1CAIP
R409
4.7K
1CAIP
C408
.01UF
+12V
C407
100UF
25V
R458
22K
1CAIP
D401
1N4110
+12VH
RV402
H:FREQ
R406
33OH
C409
1000PF
1MPS
C410
1000PF
1MPS
C402
100UF
50V
R410
10K
1CAIP
R412
C-38 SHT(3)
C408
50V

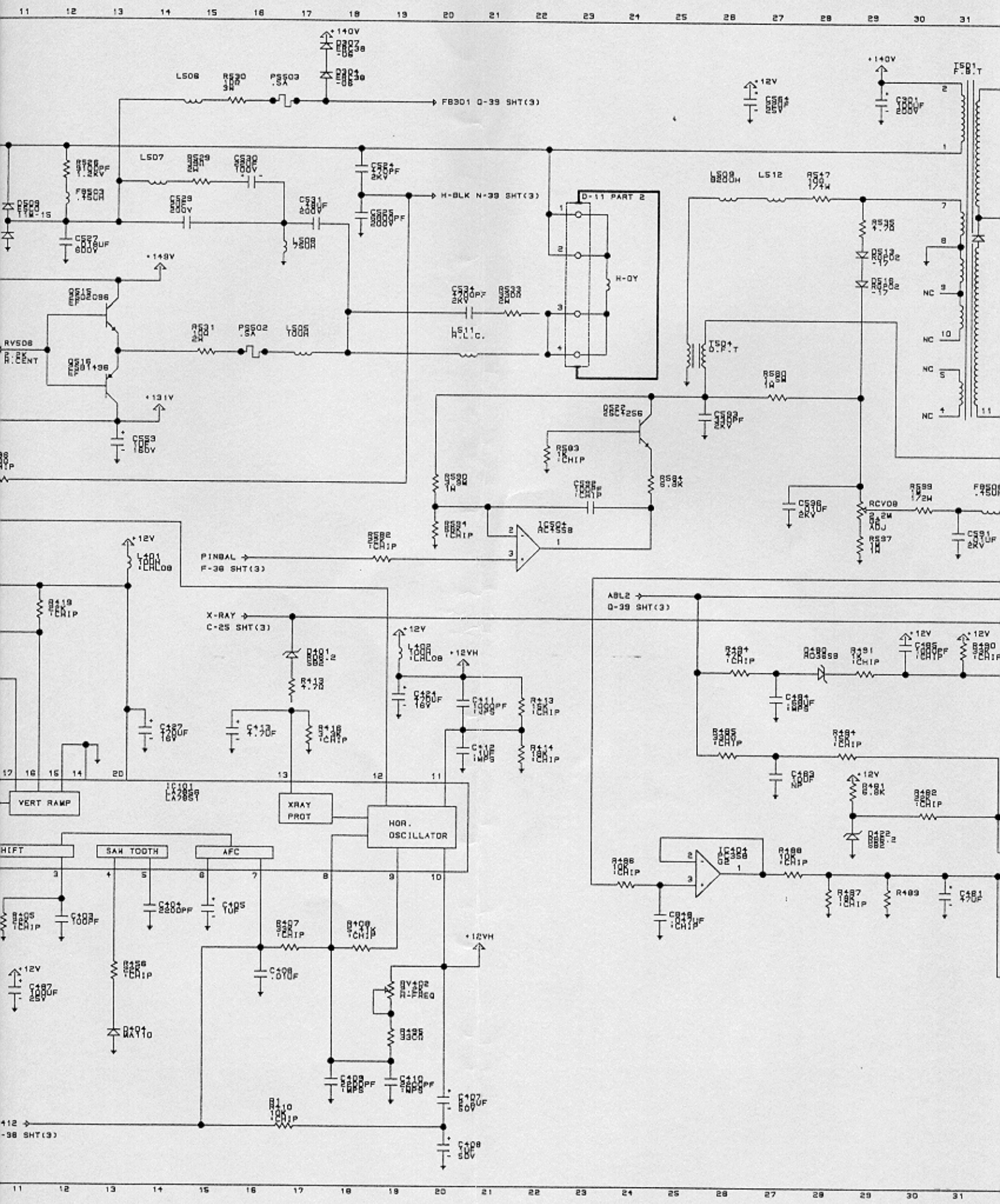
+140V
FB3D1 Q-39 SHT(3)
H-BLK N-39 SHT(3)
D-11 PART 2
H-DY
+148V
+131V
PINBAL
F-38 SHT(3)
X-RAY
C-25 SHT(3)
A8L2
Q-39 SHT(3)
+12V
+12VH
VERT RAMP
XRAY PROT
HOR. OSCILLATOR
SHIFT
SAW TOOTH
AFC

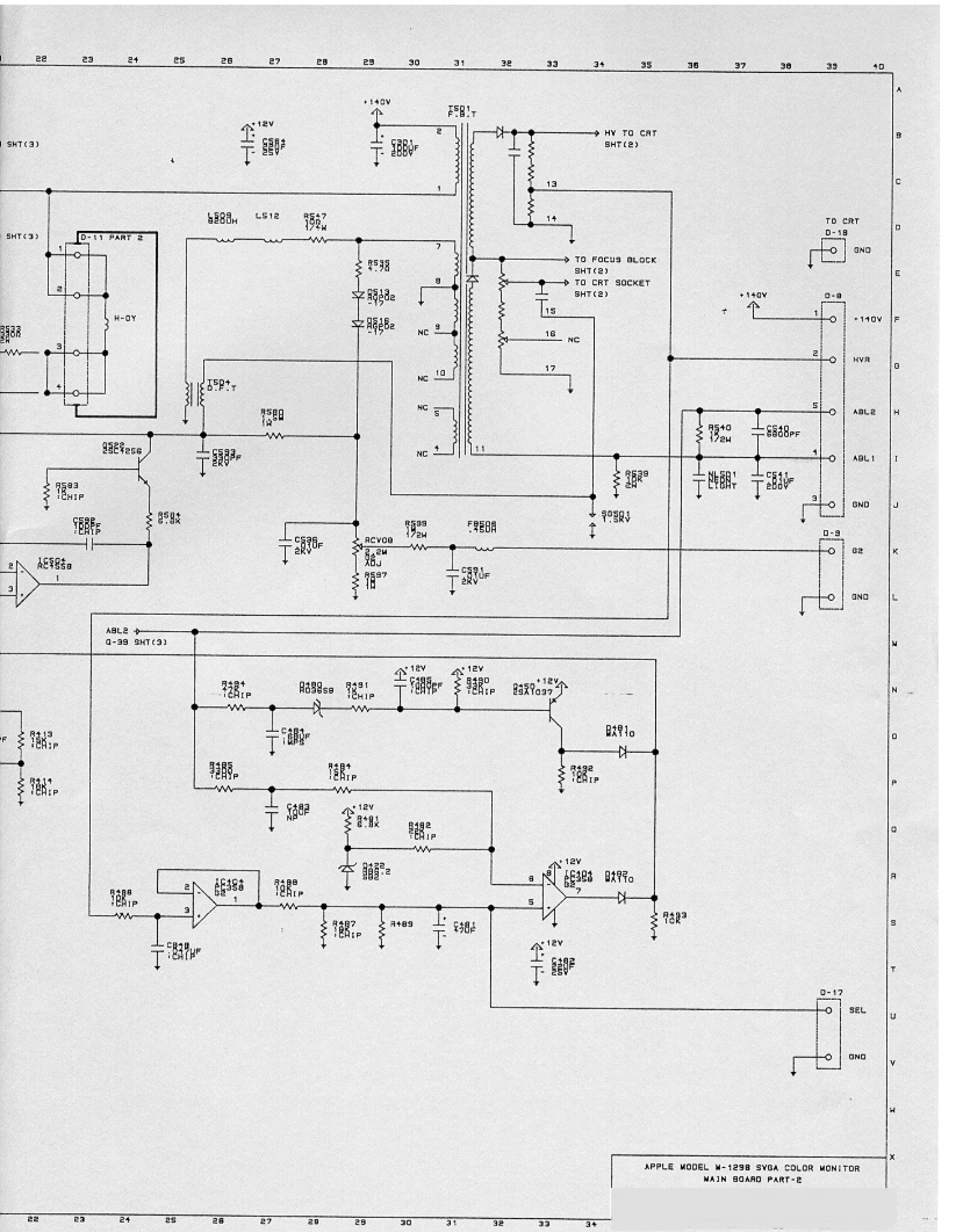
HV TO CRT
SHT(2)
TO FOCUS BLOCK
SHT(2)
TO CRT SOCKET
SHT(2)
TO CRT
D-18
GND
D-11 PART 2
H-OY
+140V
HVR
ABL2
ABL1
GND
D-9
G2
GND
ABL2
D-39 SHT(3)
D-17
SEL
GND
APPLE MODEL M-1298 SVGA COLOR MONITOR
MAIN BOARD PART-2

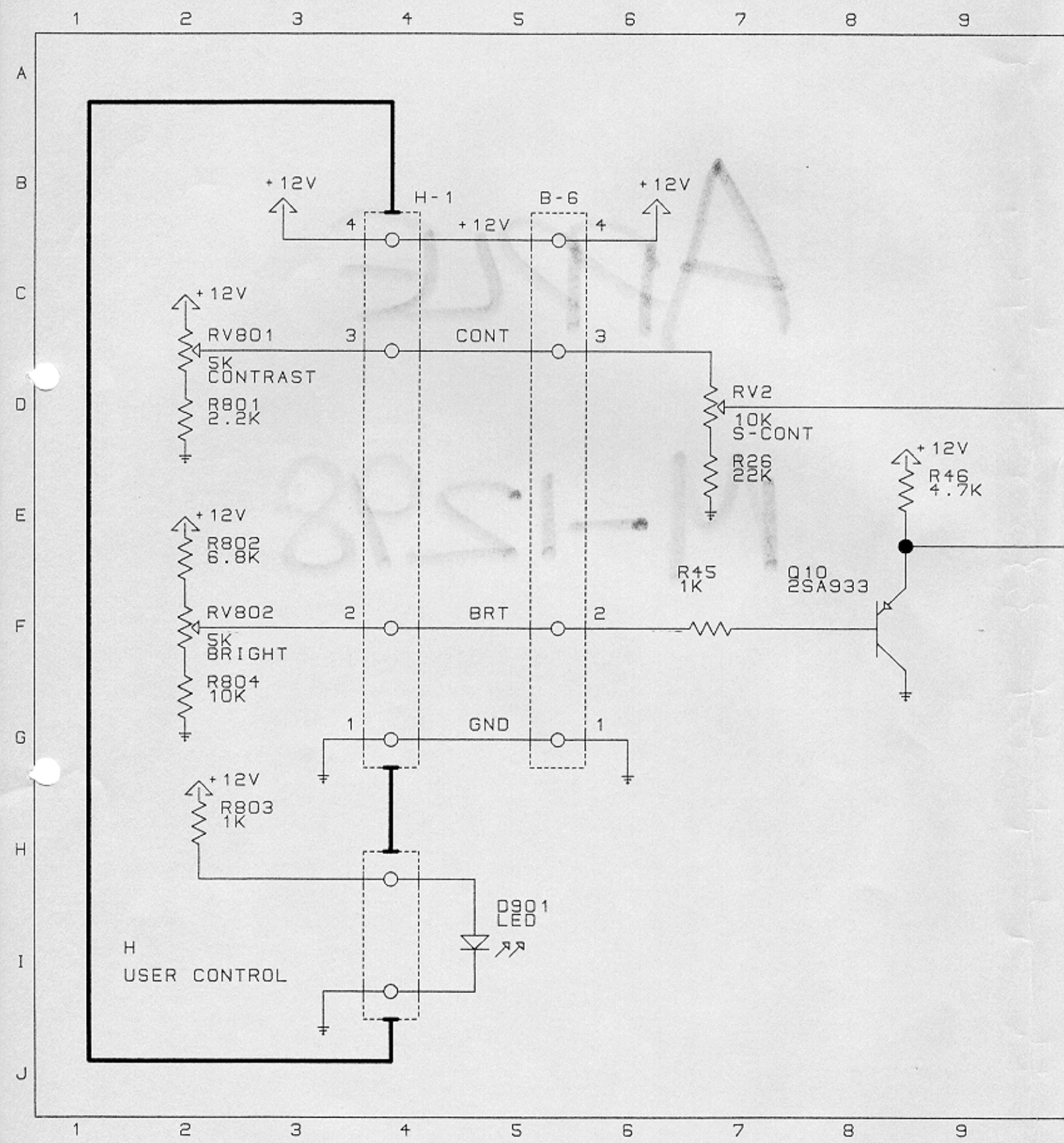
+12V
H-1
B-6
+12V
+12V
4
+12V
4
+12V
RV801
3
CONT
3
5K
CONTRAST
R801
2.2K
RV2
10K
S-CONT
R26
22K
+12V
R46
4.7K
+12V
R802
6.8K
R45
1K
Q10
2SA933
RV802
2
BRT
2
5K
BRIGHT
R804
10K
1
GND
1
+12V
R803
1K
D901
LED
H
USER CONTROL